International Journal of Psychology and Behavioral Sciences 2026, 16(2): 39-53
DOI: 10.5923/j.ijpbs.20261602.01

Does the Teacher Job Satisfaction Scale Retain the Same Factor Structure in a Non-WEIRD Context? A Psychometric Validation of the French Version of the TJSS Factor Among Primary School Teachers

Géraldine Mbeliyieh Ndansak[1], Sylvestre Nzeuta Lontio[2,*]

[1]Department of Psychology, University of Yaoundé 1, Yaoundé, Cameroon
[2]Department of Philosophy-Psychology-Sociology, University of Dschang, Dschang, Cameroon

Abstract Teachers' job satisfaction is primarily measured using instruments developed in WEIRD contexts, whose structure remains insufficiently examined in French-speaking Sub-Saharan Africa. This study examines the French version of the Teacher Job Satisfaction Scale (TJSS) among three samples comprising 1,088 Cameroonian primary school teachers (n1 =331, n2 =308, n3 =449). Exploratory factor analysis removed the "satisfaction with co-workers" dimension and retained two correlated factors comprising six items (students; parents). Confirmatory analysis indicated acceptable fit (CFI =.93; TLI =.91) and satisfactory reliability (ω =.84; α =.82). Convergent validity with well-being was modest (r =.22), whereas the concurrent (workload) and nomological (mediation) hypotheses were not confirmed. These findings suggest that the TJSS-6 measures external relational job satisfaction.

Keywords Job satisfaction, Teachers, Psychometric validation, Non-WEIRD context, Job Demands-Resources

1. Introduction

Job satisfaction remains one of the most extensively studied constructs in work and organizational psychology because of its well-established association with productivity, organizational commitment, and workers' well-being. This is particularly true in the education sector, where teachers' job satisfaction directly affects teaching quality, staff retention, and ultimately student achievement [25]. In response to this issue, international research has, in recent years, seen increasing efforts to validate job-satisfaction measurement instruments adapted to specific professional and cultural populations. However, this international trend toward contextual validation (in Indonesia, China, Zimbabwe, Turkey, and India) has, to our knowledge, not yet found an equivalent in the Cameroonian educational context, nor more broadly in French-speaking non-WEIRD Sub-Saharan Africa (non-Western, Educated, Industrialized, Rich, Democratic). This is what motivates the present study to propose and validate a French version of the Teacher Job Satisfaction Scale (TJSS) in a non-WEIRD context.

* Corresponding author:
nzeut_sylv@yahoo.com (Sylvestre Nzeuta Lontio)
Received: Sep. 23; Accepted: Oct. 20, 2026; Published: Oct. 28, 2026
Published online at http://journal.sapub.org/ijpbs

1.1. Concept of Job Satisfaction

Job satisfaction is a positive or pleasurable emotional state resulting from an individual's evaluation of their work or professional experiences [44]. This definition places the construct at the intersection of a cognitive component (evaluation) and an affective component (the resulting emotional state), which explains the plurality of theoretical models used to account for it. Herzberg's two-factor theory distinguishes hygiene factors, which are extrinsic to the work (salary, material conditions, organizational policy, relationships with supervisors), whose deterioration produces dissatisfaction without their presence being sufficient to generate satisfaction, from motivator factors, which are intrinsic (recognition, achievement, responsibility, career advancement) and are likely to genuinely produce satisfaction [50].

According to Locke [44], satisfaction results from the discrepancy between the actual expectations an individual has of their work and the gains derived from it. More recently, the Job Demands-Resources model (JD-R; [3]) places satisfaction at the intersection of job demands and the personal and organizational resources available to cope with them. Conservation of Resources theory [32], for its part, helps explain why satisfaction may deteriorate when demands persistently exceed available resources. In the same vein, literature [42] show that these approaches, far from being mutually exclusive, have gradually been combined to make job satisfaction a construct recognized as multidimensional,

comprising distinct facets (pay, relationships, tasks, recognition, working conditions) whose relative weight varies according to the professional and cultural contexts considered.

Job satisfaction is a construct that has predominantly been conceptualized, theorized, and measured in WEIRD contexts. It is precisely the contextual sensitivity of the construct that becomes problematic when examining the origins of the data underlying previous assessments of it. Henrich et al. [31] showed that the overwhelming majority of psychological knowledge about job satisfaction comes from WEIRD samples, that is, populations that are Western, educated, and drawn from industrialized, rich, and democratic societies, even though these populations represent only a marginal fraction of human diversity and differ statistically from other populations on numerous psychological and social dimensions. The field of job satisfaction is not exempt from this sampling bias. Measurement instruments derived from theoretical models of job satisfaction have been developed and validated in professional environments overwhelmingly belonging to WEIRD contexts (North America and Western Europe).

These contexts are characterized by strong institutional regulation of work (protective legal frameworks, regular remuneration, career ladders, and formalized recognition mechanisms). These theories therefore rest on an implicit and rarely questioned assumption: a professional environment in which basic employment-related needs (being paid regularly, having stable employment status, and working under decent material conditions) are already satisfied, so that job satisfaction essentially depends on factors such as recognition and personal achievement [3]. This assumption, which is relevant in a WEIRD context, becomes more debatable when it is removed from the context in which it was formulated and tested and transferred to non-WEIRD contexts where such basic regulation is limited. This prompts questions about the very structure of the construct when it is studied or assessed outside its original context. Recent contextual-validation studies conducted in Indonesia [25], China [42], Zimbabwe [50], and Turkey [67] demonstrate growing awareness of this limitation, although French-speaking Sub-Saharan Africa has not yet fully engaged with it.

The psychometric literature offers several reference instruments for measuring job satisfaction. The Job Descriptive Index [59] assesses five dimensions of work (the work itself, pay, promotion opportunities, supervision, and co-workers) among employees of structured North American companies. Similarly, the Minnesota Satisfaction Questionnaire (MSQ; [66]) distinguishes intrinsic and extrinsic satisfaction within organizations characterized by stable job-classification systems. Spector's Job Satisfaction Survey (JSS; [60]), specifically designed for human-service and educational organizations, covers nine dimensions, including pay, fringe benefits, promotion, and contingent rewards. These dimensions presuppose predictable salary scales and formalized career prospects. Gazali et al. [25] adapted this scale for physical education teachers in Indonesia on the grounds that it comprehensively covers intrinsic and extrinsic dimensions of work. The Teacher Job Satisfaction Scale [52] assesses three dimensions of teachers' job satisfaction. This scale is particularly suited to the school context; it assesses satisfaction with teacher co-workers, satisfaction with students' behaviors, and satisfaction with parents.

Gazali et al. [25] therefore developed and validated, in Indonesia, the Indonesian Physical Education Teacher Job Satisfaction Scale (IPET-JSS), a contextual adaptation of Spector's Job Satisfaction Survey designed for physical education teachers, whose nine-factor structure was confirmed in a sample of 300 teachers. Similarly, [42] translated and adapted the Labour Ward Job Satisfaction Scale for Midwives in China, following [9] translation methodology and a Delphi consultation protocol, among 456 midwives. Yalin-Ucar and Bagatarhan [67], for their part, validated the Turkish form of the nine-item Teacher Job Satisfaction Scale (TJSS-9), previously tested in six countries, by examining measurement invariance across gender among 514 Turkish teachers.

Muteveri and Egunjobi [50] validated a teacher job-satisfaction scale in Zimbabwe based on Herzberg's two-factor model and reported satisfactory internal consistency. However, this measure was validated on a pilot sample of only eleven teachers and without confirmatory factor analysis. This is a methodological limitation acknowledged by the authors themselves and illustrates the risks of insufficiently rigorous psychometric validation. Furthermore, the systematic review conducted [50] on job-satisfaction scales shows a lack of validated instruments for specific linguistic contexts. Although the authors note the absence of a Spanish version, the same applies to a French version of this scale.

The literature traces the historical evolution of instruments, from the unidimensional Job Satisfaction Index [10] to the Job Diagnostic Survey [31], through the Job Satisfaction and Job Involvement Scale [41] and the Brief Index of Affective Job Satisfaction [65], showing that most of these scales were developed in Western or industrialized contexts (WEIRD). They incompletely cover dimensions such as employee well-being, professional autonomy, or dignity at work. However, these dimensions are central to highly relational professions such as teaching. This diversity of instruments has also fueled a methodological debate about which approach should be preferred. In this regard, [48] distinguish global instruments that measure satisfaction through a single, overall judgment (a one-item measure of satisfaction) from scales with a multifactorial structure that decompose satisfaction into distinct dimensions measured separately, such as the MSQ ([66]) or the JSS [59]. Although the latter offer the diagnostic advantage of identifying specific sources of dissatisfaction, a global single-item measure may, in some cases, be more inclusive than a sum of predefined facets, because the latter may overlook work dimensions that a particular employee considers especially important.

Overall, although most of these instruments have satisfactory psychometric properties established in their original contexts,

their transfer to other French-speaking non-WEIRD societies nevertheless raises important conceptual and methodological problems. Conceptually, several dimensions of these scales lose some of their relevance and meaning in a context characterized by irregular pay, perceived injustice, corruption, the devaluation and precariousness of teachers' work, and the absence of formal career structures. Methodologically, simply translating an instrument guarantees neither semantic equivalence of the items nor reproduction of its original factor structure in the new population [64]. This means that reproducing the factor structure of a scale developed and validated in a WEIRD context is questionable when it is applied in a non-WEIRD context such as Cameroon.

1.2. Cameroon as a non-WEIRD Context in which Teacher Satisfaction is Subject to Structural Constraints

The Cameroonian education system clearly illustrates the limitations of an uncritical importation of measurement instruments developed in WEIRD contexts. For several decades, the primary education subsector has experienced persistent tension between increasing school enrollment, stagnating human and material resources allocated to it, perceived injustice, and the precarious and degraded working conditions of teachers [19]; [61]. Overcrowded classrooms, inadequate teaching materials, the massive recruitment of poorly paid temporary or community teachers, recurring delays in salary payments, and other factors summarize the converging process of precariousness affecting some conditions of the teaching profession in the Cameroonian socio-educational debate. Workload is the most directly observable indicator of these constraints experienced on a daily basis and

It reflects, at the individual level, the magnitude of the structural constraints teachers must face with increasingly limited means of personal regulation. It is precisely in this type of context that Conservation of Resources theory [32] and the JD-R model [3] become particularly salient: when structural demands, operationalized through workload and the precarious and degraded status of the teaching profession, exceed the regulatory margin available to the individual, personal resources cease to produce their usual buffering effect, and the determinants of job satisfaction may consequently be redefined. A teacher confronted with irregular remuneration and chronic classroom overload is unlikely to evaluate professional satisfaction on the same basis as an employee in a WEIRD context whose employment is structurally secure. The dimensions that dominate their evaluation (status stability, salary regularity, and sustainable workload) are precisely those that instruments originating in WEIRD contexts tend to underrepresent because they were not designed for contexts in which these issues are central. This hypothesis of a potentially different factor structure justifies a comprehensive psychometric validation of the scale in this specific non-WEIRD context, beyond linguistic translation alone.

1.3. The Present Study: Confirmatory Validation of the Teacher Job Satisfaction Scale in a non-WEIRD Context Marked by Structural Constraints

Four gaps structure the research gap addressed by the present study. First, there is a contextual gap: theorization and measurement of job satisfaction remain overwhelmingly rooted in WEIRD contexts, whose implicit assumptions (stable institutional regulation of employment and satisfied basic needs) do not necessarily hold in a non-WEIRD context such as Cameroon. Existing scales, designed for organizations with formalized salary and career structures, include facets whose relevance is questionable in a context of substantial employment insecurity. Furthermore, to our knowledge, Cameroonian use of these instruments has been limited to translation without rigorous adaptation or psychometric validation following standards comparable to those used recently in Indonesia [25], China [42], or Turkey [67]. To our knowledge, no validation has yet been conducted in a context where, according to COR [32] and JD-R [3] frameworks, workload and the precarious and degraded status of the teaching profession exceed teachers' individual resources. This is a context in which the structure of the job-satisfaction construct itself could differ from that observed in the original samples of existing instruments. The present study is positioned at the intersection of these gaps and proposes to cross-culturally adapt and then validate, according to current psychometric standards [25]; [42]; [67], a job-satisfaction measurement scale applicable to a non-WEIRD educational context.

Following cross-cultural adaptation of the TJSS (see the Methods section, Table 1), several forms of validity must be examined. Cronbach and Meehl [16], in laying the foundations of construct validity, emphasized that a nomological network should not be verified by searching retrospectively for correlations that "go in the right direction": researchers must formulate a priori what the theory predicts and then compare the data with those expectations. Testing convergent validity examines hypothesis RH1, according to which job satisfaction is positively associated with work well-being. It is based on literature presenting satisfaction, whether global or specific to a domain such as education, as the cognitive-evaluative component of subjective well-being, alongside affective balance [17]; [18]. From this perspective, satisfaction and well-being are not two independent constructs but two facets of the same evaluative process. This provides a theoretical basis for the expected positive correlation between these two constructs. This expected relationship is also consistent with the conception of subjective well-being as a set of cognitive and affective evaluations.

To test concurrent validity, the study examines the hypothesis that workload is negatively associated with job satisfaction (RH2). This hypothesis derives from the Job Demands-Resources model (JD-R; [3], which postulates that job demands (of which workload is the most direct indicator) deplete individual resources and impair positive work attitudes, including satisfaction. Conservation of Resources

theory [32] provides a complementary mechanism: workload, by threatening personal resources, reduces the individual's ability to derive a positive evaluation of their job.

To establish nomological validity consistent with the JD-R model [3], it is expected that workload will be negatively associated with job satisfaction and work well-being; satisfaction will be positively associated with well-being; and satisfaction will mediate, at least partially, the relationship between workload and work well-being (RH3). This hypothesis does not test an isolated correlation but the coherence of the entire system of relationships expected by the theoretical framework employed [3]; [32]. It is this overall coherence that constitutes, in the sense of Cronbach and Meehl [16], evidence of nomological validity. According to these authors, if only one of the expected relationships is not verified, the entire theoretical network (and therefore the interpretation of the construct) would be undermined, rather than merely an isolated hypothesis.

2. Data Collection 1: Exploratory Validation of the French Version of the TJSS in a non-WEIRD Context

2.1. Method

2.1.1. Participants

A total of 331 teachers from Cameroonian primary schools (89 men and 242 women), with a mean age of 41.35 years (SD = 8.60), were surveyed. Participants were recruited through non-probability convenience sampling among students of a private institution offering training in psychopedagogy; they were identified in advance and recruited in lecture halls at a private higher-education institute that trains teachers in psychopedagogy. They were included if they met two criteria: (1) being a parent-appointed teachers or contract teachers in a primary or nursery school; (2) being enrolled in the professional training cycle in psychopedagogy. In the fact, they included 325 contract teachers, and 6 parent-appointed teachers, 250 married and 81 single participants. From an ethical perspective, informed consent was obtained: they agreed to participate in the study and were informed of their right to withdraw at any time. They allowed the factorial structure and basic psychometric characteristics of the French version of the Teacher Job Satisfaction Scale to be explored in a non-WEIRD context.

2.1.2. Measurement and Cross-Cultural Adaptation Procedure for the TJSS: Psychometric Requirements

The psychometric literature clearly distinguishes translation, a linguistic operation, from cross-cultural adaptation, an operation intended to ensure conceptual, semantic, idiomatic, and experiential equivalence between the source and target versions of an instrument [7]. Rigorous adaptation therefore involves several steps, now widely standardized in the methodological literature [7]; [29]; [37]; [62].

Table 1. Back-translation items of the French version of the *Teacher Job Satisfaction Scale*

Original version (English)	French translation	Back-translation (English)	Re-translation into French (check)
1. The quality of your relations with co-workers	La qualité de vos relations avec vos collègues.	The quality of your relations with your colleagues.	La qualité de vos relations avec vos collègues.
2. The extent to which your co-workers encourage you and support you in your work	Dans quelle mesure vos collègues vous encouragent et vous soutiennent dans votre travail.	The extent to which your colleagues encourage you and support you in your work.	Dans quelle mesure vos collègues vous encouragent et vous soutiennent dans votre travail.
3. Your overall satisfaction with your co-workers	Votre satisfaction globale à l'égard de vos collègues.	Your overall satisfaction with your colleagues.	Votre satisfaction globale à l'égard de vos collègues.
4. The extent to which students act in a self-disciplined manner	Dans quelle mesure les élèves se comportent de manière autodisciplinée.	The extent to which students behave in a self-disciplined manner.	Dans quelle mesure les élèves se comportent de manière autodisciplinée.
5. Your satisfaction with the behavior of students in your school	Votre satisfaction à l'égard du comportement des élèves dans votre établissement.	Your satisfaction with the behavior of students in your school.	Votre satisfaction à l'égard du comportement des élèves dans votre établissement.
6. Your overall level of satisfaction with student discipline in your school	Votre niveau de satisfaction global à l'égard de la discipline des élèves dans votre établissement.	Your overall level of satisfaction with student discipline in your school.	Votre niveau de satisfaction global à l'égard de la discipline des élèves dans votre établissement.
7. The degree of interest shown by parents in the education of their children	Le degré d'intérêt manifesté par les parents pour l'éducation de leurs enfants.	The degree of interest shown by parents in their children's education.	Le degré d'intérêt manifesté par les parents pour l'éducation de leurs enfants.
8. The extent to which parents are supportive of the school and its programs	Dans quelle mesure les parents soutiennent l'école et ses programmes.	The extent to which parents support the school and its programs.	Dans quelle mesure les parents soutiennent l'école et ses programmes.
9. Your overall level of satisfaction with parents where you work	Votre niveau de satisfaction global à l'égard des parents dans votre établissement.	Your overall level of satisfaction with parents where you work.	Votre niveau de satisfaction global à l'égard des parents dans votre établissement.

The adaptation of the TJSS followed the steps prescribed by the International Test Commission [37]. The first step was direct translation: at least two bilingual translators, working independently of each other, each produced a French version of the original English scale. These versions were compared and synthesized into a single consensus version, with discrepancies resolved to preserve the meaning of each item rather than its literal wording. The second step consisted of back-translation into English, performed by a third translator who had not had access to the original version [9]; comparison between the back-translated version and the source scale made it possible to identify shifts in meaning introduced during the initial translation. In the third step, a committee of three experts (two researchers experienced in psychometrics and one bilingual linguist) then examined all versions to determine four types of equivalence [7]: semantic equivalence (the meaning of words), idiomatic equivalence (expressions without a direct equivalent), experiential equivalence (the relevance of the situations described by the item to respondents' professional daily lives), and conceptual equivalence (the validity of the construct itself in the target culture) [8]. A fourth step consisted of retranslation into French (control) of the version obtained through reverse translation (English; see Table 1). The term "Co-workers," which means "collègues" in French, became "colleagues" in the reverse English version for reasons of conceptual equivalence.

The survey collected gender (male and female), marital status (married, single, widowed, and divorced), professional status (contract teacher versus parent-appointed teacher), and job satisfaction using a self-administered questionnaire. The Teacher Job Satisfaction Scale [52] assesses three dimensions of teachers' job satisfaction. It was translated into French in the Cameroonian (non-WEIRD) context. The nine items (α =.788, Ω =.745) were administered to measure satisfaction with co-workers (α =.685, Ω =.791), satisfaction with students' behaviors (α =.842, Ω =.847), and satisfaction with parents (α =.830, Ω =.836). The questionnaire was administered in paper format. Participants were invited to answer each item honestly by selecting one response option on the Likert scale.

Table 2. Item statistics and factor analysis of TJSS

	M	SD	Skewness	Kurtosis	Factor loadings		
					F1	F2	F3
TJSS1. *La qualité de vos relations avec vos collègues.* /The quality of your relations with co-workers.	3.78	1.32	-.79	-.67	-	-	-
TJSS2. *Dans quelle mesure vos collègues vous encouragent et vous soutiennent dans votre travail./* The extent to which your co-workers encourage you and support you in your work	3.86	1.28	-.90	-.44	-	-	-
TJSS3. *Votre satisfaction globale à l'égard de vos collègues./* Your overall satisfaction with your co-workers	4.15	1.05	-1.43	1.55	-	-	-
TJSS4. *Dans quelle mesure les élèves se comportent de manière autodisciplinée./* The extent to which students act in a self-disciplined manner	3.88	1.24	-.93	-.24	.74	-	-
TJSS5. *Votre satisfaction à l'égard du comportement des élèves dans votre établissement./* Your satisfaction with the behavior of students in your school	3.74	1.28	-.73	-.68	.91	-	-
TJSS6. *Votre niveau de satisfaction global à l'égard de la discipline des élèves dans votre établissement*./ Your overall level of satisfaction with student discipline in your school	3.84	1.22	-.82	-.49	.74	-	-
TJSS7. *Le degré d'intérêt manifesté par les parents pour l'éducation de leurs enfants./* The degree of interest shown by parents in the education of their children	3.77	1.30	-.86	-.44	-	-	.66
TJSS8. *Dans quelle mesure les parents soutiennent l'école et ses programmes./* The extent to which parents are supportive of the school and its programs	3.77	1.33	-.84	-.53	-	-	.88
TJSS9. *Votre niveau de satisfaction global à l'égard des parents dans votre établissement./* Your overall level of satisfaction with parents where you work	3.76	1.31	-.83	-.54	-	-	.76

Factor analysis							
	Bartlett's test			Total variance explained			
Kaiser-Meyer-Olkin index	$\chi 2$	df	p-value	Factor	Eigenvalue	% of variance	% cumulative
.77	952.78	15	.000	SSB -F1	3.34	55.70	55.70
				SP -F2	1.23	20.57	76.27

Note. TJSS: Teacher Job Satisfaction Scale, F: Factor; M: Mean; SD: Standard deviation; Final retained items after removing the 3 items (TJSS1, TJSS2 and TJSS3) of Satisfaction with co-workers (F2) with factor loadings <.40

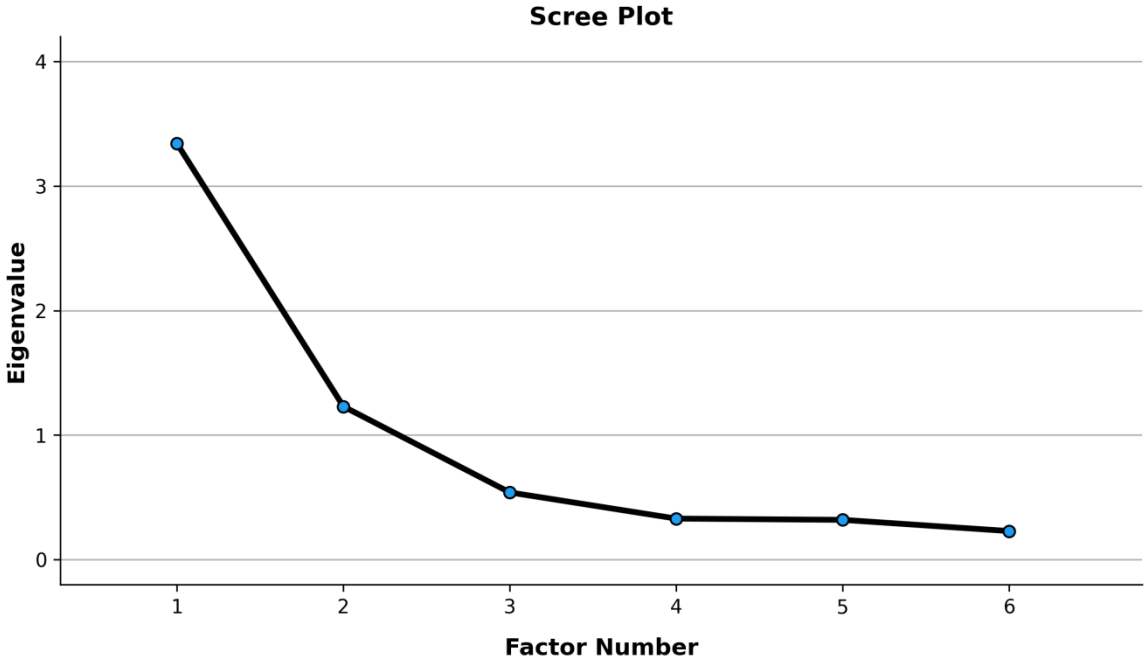

Figure 1. Scree plot

2.2. Results

2.2.1. Exploratory Factor Analysis (EFA)

The initial version of the Teacher Job Satisfaction Scale, consisting of nine items distributed across three dimensions, was subjected to exploratory factor analysis (EFA) using SPSS 27 to identify the items most relevant to the new factor structure. EFA was performed using principal axis factoring, with Oblimin rotation and Kaiser normalization. The variance explained by the factor model and the factor loadings were then examined. These analyses led to the retention of six items with factor loadings of at least .40, consistent with usual recommendations for scale validation [8]. Three items were removed because of cross-loadings of at least 0.40. The "satisfaction with co-workers" dimension was therefore removed from the final version.

Examination of the suitability of the data for factor analysis showed that the correlations between variables were sufficient. The Kaiser-Meyer-Olkin index (KMO =.77) indicated satisfactory sampling adequacy, while the correlation matrix displayed the properties required to extract latent factors from the TJSS (χ^2-Bartlett(df) =952.78(15), p =0.000). The EFA revealed two (02) latent factors with eigenvalues ≥1 (see Table 1). Factor loadings were satisfactory, ranging from .66 to.91. The two factors explained 55.70% and 20.57% of the variance, respectively, representing 76.27% cumulative explained variance (see Table 2).

The scree plot illustrates the selection of the six items grouped into two latent factors and makes it possible to assess the eigenvalues and explained variance.

3. Data Collection 2: Confirmatory Factor Analysis of the TJSS

3.1. Method

3.1.1. Participants

A total of 308 teachers from Cameroonian primary schools (82 men and 226 women), with a mean age of 41.59 years (SD = 8.47), were surveyed. They included 229 married and 79 single participants, 298 contract teachers, and 9 parent-appointed teachers. They were recruited, through non-probability convenience sampling (See the same inclusion criteria as those in Study 1), in lecture halls at a private higher-education institute that provides contract teachers and parent-appointed teachers with training in psychopedagogy. From an ethical perspective, the same ethical standards as in Study 1 were applied to them. This sample made it possible to test the confirmatory factor structure of the TJSS and examine its initial validity evidence.

3.1.2. Measures and Procedure

The study collected sociodemographic characteristics such as age, gender, and professional status (contract and temporary teachers) and work setting (urban or rural), as well as the three main study variables using self-report psychometric scales with a Likert-type response format ranging from 1 (Strongly disagree) to 5 (Strongly agree).

The Teacher Job Satisfaction Scale (6-items, α =.82, Ω =.80) is the short version of this scale. It has two dimensions obtained after verifying the structure of the original scale in

a sample from the non-WEIRD context. It measures Satisfaction with students' behaviors (α =.83; Ω =.841; for example: "Your satisfaction with the behavior of students in your school.") and satisfaction with parents (α =.81; Ω =.82; for example: "Your overall level of satisfaction with parents where you work."). Participants had to read each item and check/circle the number corresponding to their position on that item.

3.2. Results

3.2.1. Confirmatory Factor Analyses (CFA)

Confirmatory factor analyses were conducted using AMOS. The distribution of the six items was first examined using skewness coefficients. Missing data were handled by deleting incomplete observations (listwise deletion), and residual covariances were examined. Model fit was assessed using the chi-square, Comparative Fit Index (CFI), Tucker-Lewis Index (TLI), and Root Mean Square Error of Approximation (RMSEA), based on criteria reported in the methodological literature.

CFA of the hypothesized two-factor structure of the TJSS reported acceptable factor model fit indices (see Figure 2). Despite the significance of the chi-square (χ^2(df) = 59.70(8), p <.001), the other fit indices were satisfactory (CFI =.93; TLI =.91). The RMSEA indices indicated a favorable fit of the TJSS factor model to the data (RMSEA = .06; 95% CI = .01, .08). The standardized factor loadings were also high, ranging from .68 to .88 (see Figure 2). All these findings support a two-factor model of the TJSS that fits the data from the non-WEIRD context.

3.2.2. Content Validity of TJSS-6

Table 3. Content validity of TJSS-6

	1	2	M	SD
1. Tearcher Job Satisfaction scale	1		21.90	5.68
2. Satisfaction with students' behaviors	.84**	1	10.99	3.31
3. Satisfaction with parents.	.85**	.44**	10.90	3.36

Note. **. p< 0.01 level (2-tailed); M=Mean, SD=Standard deviation; FL=Factor loading

The results in this table indicate that the final version of the TJSS is strongly and significantly related to its two dimensions (see Table 2). In fact, TJSS is significant related to satisfaction with students' behaviors (r=.84; p< 0.01) and satisfaction with parents (r=.85; p< 0.01). The two dimensions of the TJSS are significantly liked each to other (r=.44; p< 0.01). This supports its content validity.

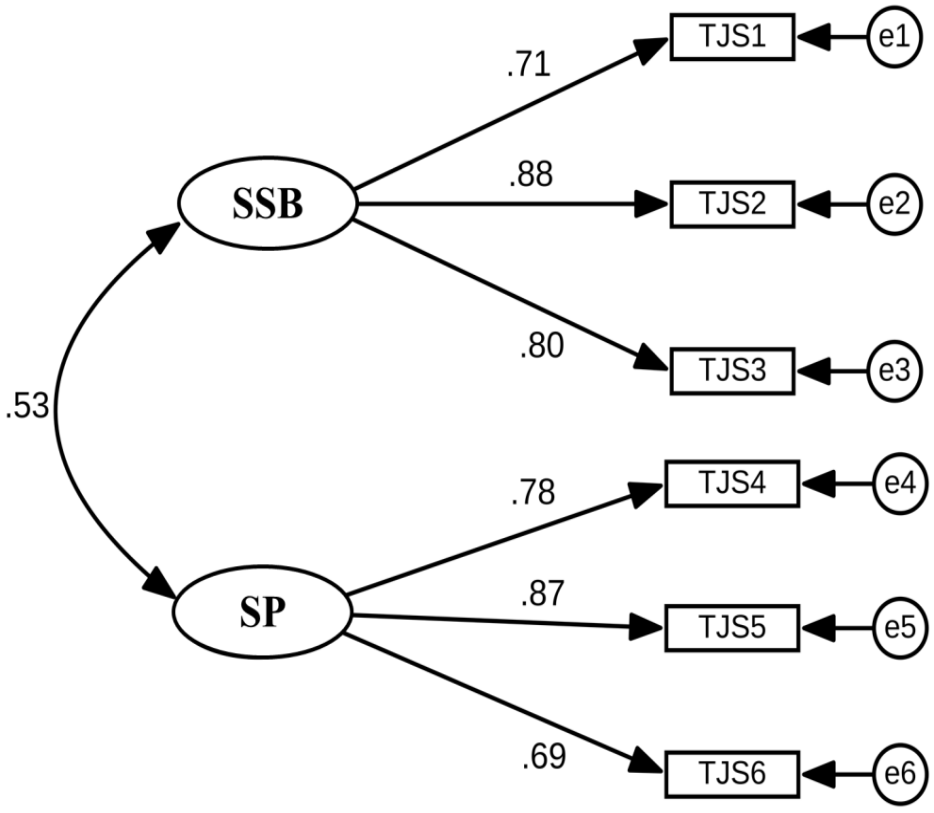

Note. χ2 = 59.70, df = 8, p <.001; incremental fit indices: CFI =.93, IFI =.93, TLI =.91; RMSEA =.06; F1 = Satisfaction with students' behaviors, F2 = Satisfaction with parents. Sat = Satisfaction

Figure 2. Confirmatory measurement model of the French version of the TJSS in a non-WEIRD context

4. Data Collection 3: Assessment of the Validity of the French Version of the Teacher Job Satisfaction Scale in a Non-WEIRD Context

4.1. Method

4.1.1. Participants

The survey was conducted in the lecture halls of a private higher-education institute among 449 teachers (432 contract teachers and 17 parent-appointed teachers) from nursery and primary schools who were undergraduate students in psychopedagogy. They were recruited using the same inclusion criteria and through non-probability convenience sampling as those in Studies 1 and 2. From an ethical perspective, the same ethical standards as in aforementioned Studies 1 and 2 were applied to them. This sample made it possible to establish the validity of the TJSS.

4.1.2. Measures and Procedure

The study collected sociodemographic characteristics such as age, gender, professional status (contract and temporary teachers), and religion (Christian or Muslim), as well as the three main study variables using self-report psychometric scales with a Likert-type response format ranging from 1 (Strongly disagree) to 5 (Strongly agree).

- Workload measure [43] (8-items, α =.90, Ω =.90) (i.e., "I have to perform work that is not included in the job description.");
- The Teacher Job Satisfaction Scale (6-items, α =.86, Ω =.84) is the short version of this scale. It has two dimensions obtained after verifying the structure of the original scale in a sample from the non-WEIRD context. It measures Satisfaction with students' behaviors (α =.87; Ω =.87; for example: "Your satisfaction with the behavior of students in your school.") and satisfaction with parents (α =.83; Ω =.84; for example: "Your overall level of satisfaction with parents where you work.");
- The work well-being measure [1] (23 items, α =.93; Ω =.93) (i.e., "I know that I can rely on my colleagues at work.").

Overall, Cronbach's alpha and McDonald's omega coefficients indicate that the data-collection instruments are reliable. Participants had to read each item and check/circle the number corresponding to their position on that item.

4.2. Results

Distributions and reliability were tested. Validity based on relationships with other variables was established by comparing instrument scores with a priori predictions [2]; [16]. Tables 4 and 5 (N = 449) subjected the TJSS to three hypotheses derived from the Job Demands-Resources model (JD-R) [3] and Conservation of Resources theory (COR) [32]: convergent validity (HR1), concurrent validity (HR2), and nomological validity (HR3). The magnitude of correlations was assessed using Cohen's [14] guidelines (approximately .10 for a small correlation, .30 for a medium correlation, and .50 for a large correlation) and the empirically based guidelines of Gignac and Szodorai [27], according to which correlations of .10, .20, and .30 are respectively small, typical, and large in differential psychology. The 95% confidence intervals (CIs) were calculated using Fisher's transformation from the reported coefficients and sample size.

4.2.1. Convergent Validity of the TJSS-6

Overall TJSS was positively associated with well-being (r =.22; p <.01), confirming HR1 with regard to the direction of the relationship. It was no significantly related to Workload (r=.050; p>.05). Satisfaction with students' behavior was positively associated with well-being (r=.29; p <0.01) and negatively related to workload (r= -.06; p>.05). Satisfaction with parents was associated significantly with well-being at work (r=. 10; p <0.05). This result supports the convergent validity of TJSS-6.

4.2.2. Concurrent Validity of TJSS-6 (HR2)

Hypothesis 2 predicted a negative association between workload and satisfaction. It was not confirmed. For the total score, the relationship was null (r =.05; B =.04; β =.05; p >.05; R^2=.003). For satisfaction with students, it was in the expected direction but negligible and non-significant (β = −.06; p >.05; R^2=.004). For satisfaction with parents, it was significant but in the opposite direction to the prediction (β =.16; p <.001; R^2=.02): the higher the perceived workload, the higher the satisfaction with parents. These effects with opposite signs explain the near-null total score, which aggregates them.

Table 4. Convergent validity of the TJSS-6

	1	2	3	4	M	SD
1. Teacher Job Satisfaction	1				22.68	6.01
2. Satisfaction with students' behaviors	.87**	1			11.55	3.39
3. Satisfaction with parents	.87**	.53**	1		11.13	3.47
4. Workload	.05	-.06	.16**	1	25.66	8.61
5. Well-being at work	.22**	.29**	.10*	-.54**	77.70	22.05

Note. N=449. **. p <0.01 (two-tailed); *M:Mean; SD: Standard deviation*

Table 5. Concurrent validity tests of TJSS-6

Regression model	R	R^2	R^2 adjusted	B	SE	Beta (β)	t	p-value	95% CI	
Predictors	Explaining Teacher Job satisfaction									
Workload	.05	.003	.001	.04	.03	.05	1.24	.21	-.02	.10
	Explaining Satisfaction with students' behaviors in simple regression model									
	.06	.004	.002	-.02	.01	-.06	-1.41	.15	-.06	.01
	Explaining Satisfaction with parents									
	.16	.02	.02	.06	.01	.16	3.57	.000	.03	.10
	Explaining teachers' well-being at work in multiple regression model									
Workload	.60	.36	.36	-1.44	.09	-.56	-14.96	.000	-1.63	-1.25
Teacher Job satisfaction				.94	.13	.25	6.86	.000	.67	1.22

Note. Dependent variables: TJS: Teacher Job satisfaction (f(1, 447)=1.53, p>.05); Satisfaction with students' behaviors (f(2, 447)=2.00, p>.05); Satisfaction with parents (f(3, 447)=12.763, p<.001); Well-being at work among teachers (f(4, 446)= 13.01, p<.001); (f(5, 446)= 22.81, p<.001)

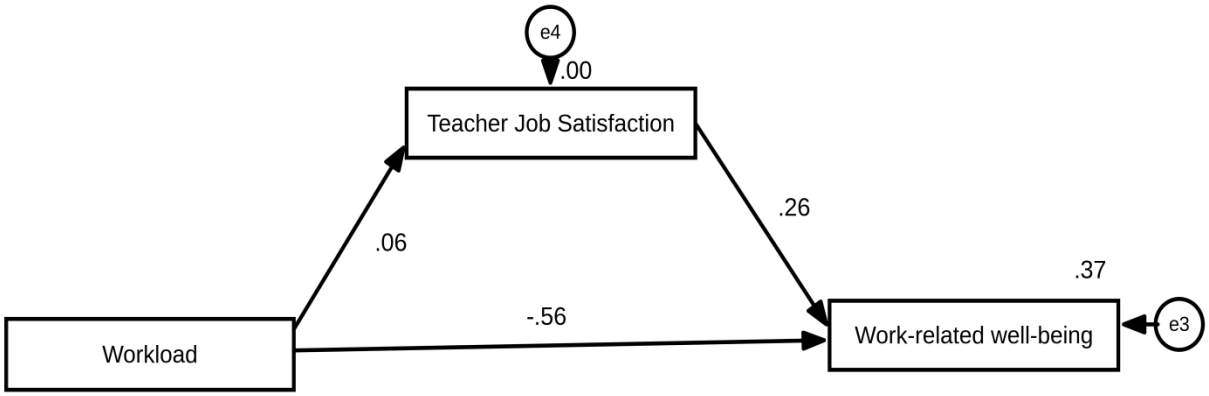

Figure 3. Mediation relationship between workload, job satisfaction, and work well-being

4.2.3. Nomological Validity of TJSS-6 (HR3)

Hypothesis 3 comprises four predictions: (HR3-1) workload is negatively associated with well-being; (HR3-2) satisfaction is positively associated with well-being; (HR3-3) workload is not significantly associated with satisfaction; (HR3-4) satisfaction mediates, at least partially, the relationship between workload and well-being. Model 4 (see Table 5; R^2=.36; F(2, 446) = 130; p <.001) confirms HR3-1 and HR3-2. Workload is the dominant predictor (β = −.56; 95% CI [−1.63; −1.25]), with a large effect (r = −.54; approximately 30% shared variance). Satisfaction retains a small-to-medium independent effect (β =.25; p <.001), corresponding to an increase of approximately 6.7% in explained variance (see Table 4).

However, HR3-3 is confirmed, meaning that HR3-4 cannot be supported because mediation requires the predictor to be related to the mediator ([31]; [72]). Based on the Sobel test, the product of coefficients a ×b gives a standardized indirect effect of approximately.015 (.06 ×.26), which is non-significant (z = 1.22; p =.22), representing barely 3% of the total effect and having the opposite sign to the direct effect.

Nomological validity is therefore only partially supported: the relationships of workload and satisfaction with well-being are consistent with expectations, but the workload–job satisfaction relationship, the central link in the network, is not. In the strict sense of the requirement of Cronbach and Meehl [16] adopted in this study, it is not established. These authors nevertheless point out that disagreement between prediction and observation may be due to the instrument, the theory, or the auxiliary hypotheses linking them.

5. Discussion

This study aimed to adapt and validate the French version of the Teacher Job Satisfaction Scale among Cameroonian primary school teachers in a non-WEIRD context where structural constraints chronically exceed the margin for individual regulation. Three findings emerge: (1) exploratory factor analysis removes the "satisfaction with co-workers" dimension and retains two correlated factors (Satisfaction with students' behaviors; Satisfaction with parents), supported by confirmatory factor analysis; (2) reliability is satisfactory; and (3) validity evidence is partial, with modest convergence (HR1), absence of the expected relationship with workload (HR2), and a partial nomological network (HR3). These findings show that the French version of the TJSS encounters cultural realities specific to the non-WEIRD context.

In the initial three-factor solution, none of the three "co-workers" items reached the standard threshold of .40 used [8]. Their loadings were not acceptable and did not define a distinct factor. The descriptive profile is consistent with this finding. Indeed, the latent dimension measured by

these items (satisfaction with co-workers) had the highest mean, the strongest negative skewness, positive kurtosis, and the smallest standard deviation. This indicates a ceiling effect and restricted variance, which inevitably attenuate covariances with the other items. This subscale was therefore the least reliable of the three, challenging the internal structure of the TJSS. The two-factor solution explains a large percentage of the variance, but the second factor is retained only marginally, calling for confirmation by parallel analysis [28]; [65].

This finding can be interpreted as an indication of construct bias [63]. In other words, the three-factor structure of the original scale is not reproduced in the Cameroonian context. Yet this structure has been tested, with configural and metric invariance, in only six distinct cultural contexts (the Netherlands, United States, Russia, China, Italy, and Palestine), none of which is in Sub-Saharan Africa [52]. Instruments designed in WEIRD contexts regularly lose part of their structure when administered to populations with particular response styles and under constrained administration conditions [40]; [56]. The removal of the "Satisfaction with co-workers" dimension therefore does not necessarily indicate an adaptation failure; it may nevertheless constitute a substantive finding concerning the organization of the construct in this context. Four non-mutually exclusive explanations can be proposed and tested.

Social desirability bias may account for this variation in the structure of the TJSS. Evaluating one's colleagues negatively is socially sensitive when group cohesion is strongly valued, and response styles (acquiescence, extreme responding) vary across cultures [38]; [58]. Collective paper-and-pencil administration in lecture halls where colleagues are together likely increases social desirability [54]. The observed ceiling effect on the global item is consistent with this hypothesis.

Participants were recruited in a training institute where they are simultaneously workplace colleagues and peers. The referents "students" and "parents" are unambiguous, whereas the expression "your colleagues" may refer to school colleagues or classmates, thereby increasing response heterogeneity and weakening the coherence of the set of items. This ambiguity concerns experiential equivalence [7]. In a context of employment insecurity and limited resources, solidarity among colleagues may function as a collective resource mobilized by everyone, as predicted by COR theory through resource caravans and the cultural embeddedness of the self [33]; [34]. A resource that is so widely distributed varies little between individuals and is experienced more as an acquired condition than as a source of satisfaction to be evaluated. According to the JD-R model, colleague support is also a job resource that may buffer the effect of demands [6], rather than a component of satisfaction.

The TJSS items reflect a conception of collegiality (quality of relationships, encouragement, and support) that may not exhaust the professional relationships experienced in Cameroon, where these also include relationships with supervisors and local management. An action-research study involving 1.233 primary school teachers in six regions highlights the importance of the quality of interpersonal relationships at school, including in relation to violence experienced by teachers [19]. If these relationships matter, their measurement through three generic items may have lacked relevance, which relates to conceptual equivalence [7]; [37]. A cognitive pretest and interviews with contract teachers and parent-appointed teachers would help resolve this issue.

The two retained dimensions concern students and parents, that is, the recipients of teaching. The French version of the TJSS therefore measures less satisfaction with workplace relationships than satisfaction with the external educational community, where structural constraints become objectively visible. This perspective is consistent with research placing student discipline among the conditions most strongly associated with teacher satisfaction [21]. These two factors, correlated at approximately 29% shared variance, are also more plausible than a single factor. However, it is appropriate to refer to a "two-correlated-factor structure" [56]. Excluding one dimension leads to underrepresentation of the construct, as Messick [47] points out. In other words, the TJSS-6 is not equivalent to the TJSS-9 and should not be presented as such. The TJSS-6 assesses professional satisfaction oriented toward learners and students' parents.

From the perspective of psychometric standards, the TJSS-6 has strengths: overall and dimension-level reliability above .80; standardized loadings above .40 [8]; and a structure reproduced between the exploratory sample (N =331) and the confirmatory sample (N =308). Model fit, however, is acceptable without being optimal: incremental indices (CFI; TLI) exceed the conventional minimum acceptable threshold [36], while the significant χ^2 and χ^2/df exceed usual benchmarks. Therefore, one cannot conclude that the structure is definitively established.

The JD-R distinguishes a health-impairment process, in which demands deplete resources and undermine well-being, from a motivational process, in which resources foster engagement and positive attitudes, including satisfaction [4]; [5]. COR theory adds the principle of loss primacy: resource loss weighs more heavily than an equivalent gain and generates spirals, especially among those with few resources [33]; [35]. From this perspective, the findings concerning workload are consistent with this framework. Indeed, workload strongly predicts a significant reduction in well-being, whereas satisfaction positively predicts well-being. This asymmetry illustrates the predominance of loss. Thus, where workload is structurally high and resources are scarce, the depletion of resources by demands dominates the well-being experience. The core of the nomological network (demand or workload–well-being) is therefore supported in the non-WEIRD context, which strengthens the validity of workload and well-being measures more than that of the TJSS-6. The missing link is the workload–satisfaction relationship (HR2), on which mediation (HR3) depends.

Given the specificity of the content domain, the JD-R predicts a relationship between demands and satisfaction with working conditions, whereas the TJSS-6 assesses satisfaction with people (students, parents). Because of the lack of compatibility between predictor and criterion [1], the expected relationship may not have emerged. The TJSS-6 does not cover the facets most affected by the precarious and degraded status of the teaching profession (regularity of pay, employment stability, material resources), which the research problem nevertheless identified as central and which recent research on decent work in Cameroon places at the forefront [19].

Demands are not all detrimental: demands perceived as challenges are associated with higher satisfaction, whereas those perceived as hindrances are associated with lower satisfaction [15]; [52]. Some tasks outside the job description (family relations, community engagement) may belong to the first category and overlap with the "parents" facet, which could explain the positive relationship observed. Reverse causality is also plausible: teachers who are more engaged with families may accumulate more tasks and evaluate parents more favorably.

According to discrepancy theory [44], satisfaction reflects the distance between expectations and perceptions; expectations lowered by chronic constraints may maintain satisfaction despite objectively unfavorable conditions [13]. COR theory adds that, in a context of prolonged loss, resource gains become more salient [33]: relationships with students and parents may then be evaluated in their own right, independently of workload. When confronted with the theoretical framework, the findings qualify rather than refute its universality. The health-impairment process (demand → well-being) is reproduced in the non-WEIRD context with remarkable strength. By contrast, satisfaction, as measured here, does not function as the link between demands and well-being; it contributes to well-being additively rather than through mediation. This dissociation is compatible with the initial hypothesis that the implicit assumptions of theories and instruments originating in WEIRD contexts (basic needs satisfied, satisfaction determined by higher-order factors) do not transfer without assessment [26]; [31]. It should nevertheless be recalled that only part of the model was tested: the study measures one demand and one outcome, but no job or personal resources (autonomy, supervisory support, self-efficacy), so the other parts of the model could not be examined.

6. Limitations and Future Directions

The three samples came from private higher-education institutes and comprised teachers in training (undergraduate psychopedagogy students), overwhelmingly contract teachers, with a predominance of women. Teachers who enroll in an undergraduate degree program are probably more motivated and have greater educational capital than the teaching population as a whole; the context is non-WEIRD in economic and institutional terms, but less so in terms of education. Parent-appointed teachers, teachers in rural areas, those in the private sector or the English-speaking subsystem, and those working in insecure areas are not represented. Because Cameroon is heterogeneous, the findings cannot be generalized beyond this sample or considered representative of "the" non-WEIRD reality [50]; [55]. A subsequent study should therefore include these teachers in the sample to test measurement invariance of the TJSS-6, or even propose a new teacher job-satisfaction scale validated in Cameroonian context with a sample of teachers of primary and nursery school, secondary school and/or university.

The study did not compare the non-WEIRD sample with a WEIRD sample. The structural difference is confounded with sample, language, translation, and administration mode, and attributing it to the non-WEIRD character or structural constraints remains an interpretive inference. Variables intended to represent these constraints (pay regularity, employment stability, class size, work setting) were not measured as covariates. In a future study, these variables could be assessed to establish relationships with teacher satisfaction. Similarly, the French version was administered in an officially bilingual country: comprehension of the items by teachers with different linguistic backgrounds was not verified; this would make it possible to determine whether the structure of the TJSS varies according to language.

The major limitation concerns the absence of measurement -invariance tests. No multi-group analysis was conducted by gender, professional status, work setting, or sample. This limitation resulted from insufficient sample sizes within these subcategories. Yet the power of invariance tests depends on group size [46]. Comparing groups, or interpreting differentiated relationships, assumes that the instrument measures the same construct in the same way in each group [63]; [54]. Without this evidence, differences in means or correlations between subgroups are not interpretable, and non-invariance would bias fit indices [14]. From a cross-cultural perspective, the source version was subjected only to configural and metric invariance tests [51], not scalar invariance, outside Sub-Saharan Africa. The TJSS-6, a reduced form not adjusted within the TJSS-9, does not allow mean comparisons with previous studies. The usual sequence (configural, metric, scalar, residual; ΔCFI $\leq$.01; [11] or partial invariance [23] will need to be applied to larger and more diverse samples, as in the Turkish validation of the TJSS-9 by gender [66]. These limitations should be addressed in a subsequent study.

Future research should (a) conduct multi-group analyses on stratified samples (status, area, region, linguistic subsystem); (b) compare the TJSS-6 with the source version in a cross-cultural design; (c) estimate a latent-variable model incorporating JD-R resources; and (d) use a mixed-methods approach to explore the "co-workers" dimension and generate items.

7. Implications of the Findings

The following implications are based on the findings obtained in the non-WEIRD context and should be read in light of the limitations identified above. The TJSS-6 can be used as a tool for assessing satisfaction with the educational micro-environment (students, parents). Subscale scores should be reported separately rather than summed: their relationships with well-being differ, and their relationships with workload have opposite signs. The scale should not be used as the basis for high-stakes individual decisions or comparisons with international norms until invariance has been established [37].

The TJSS-6 does not cover the facets most affected by structural constraints. An assessment of teacher satisfaction should supplement it with locally developed facets (pay regularity, employment stability, material resources, internalization of the precarious and degraded status of the profession), developed with contract teachers and parent-appointed teachers, and should measure colleague support as a distinct job resource.

Workload is the dominant predictor of well-being and is independent of the satisfaction measured. Thus, improving satisfaction will not compensate for overload. Priority levers are clarification of job descriptions and limitation of tasks outside the assigned mission, redistribution of administrative tasks, and support for managing overcrowded or multigrade classrooms [61]. According to COR theory, investing early in resources prevents loss spirals [35]. Satisfaction with student behavior is the facet most strongly related to well-being. Initial and continuing teacher education would benefit from integrating classroom and discipline management, including in large classes, as well as school-family partnerships adapted to low-resource communities. Colleague solidarity can be mobilized through peer mentoring and collaborative teaching practices, recommended by recent research in Cameroon [19].

Lowered expectations can maintain satisfaction despite unfavorable conditions [13], and satisfaction does not follow workload in this study. High satisfaction therefore does not demonstrate that working conditions are acceptable; it should be considered alongside objective indicators (salary delays, class size). In Francophone Africa, including Cameroon, the gap between teachers' expectations and professional reality may reduce satisfaction without this being aligned with student outcomes [48].

8. Conclusions

The French version of the TJSS in the Cameroonian context is reduced to two reliable and correlated factors, but its nomological validity is only partially supported. The findings confirm the relevance of the JD-R health-impairment process and the loss-primacy principle of COR theory, while showing that the measured satisfaction does not transmit the effect of workload on well-being. The TJSS-6 should therefore be used as a measure of external professional satisfaction, with two subdimensions, and should undergo measurement-invariance testing and replication in more diverse samples in non-WEIRD contexts before any generalization.

ACKNOWLEDGEMENTS

We sincerely thank all the teachers, both male and female, who voluntarily agreed to participate in this study. We deeply appreciate their time, cooperation, and valuable contribution to this research.

Funding: The authors received no institutional funding to conduct this research.

Informed consent statement: Informed consent was obtained from all subjects involved in the study.

Data availability statement: The data from this study will be made available to third parties upon request addressed to the first author.

Conflict of interest: The authors have no potential conflict of interest to report.

REFERENCES

[1] Abaidi, J. (2015). Le bien-être au travail: construction et validation d'une échelle de mesure. Thèse de Doctorat en Gestion et management. Université de La Rochelle. 10.70675/5aa4fecfz1ac2z4842zae00z0991f8cecb19.

[2] Ajzen, I., & Fishbein, M. (1977). Attitude-behavior relations: A theoretical analysis and review of empirical research. *Psychological Bulletin, 84*(5), 888–918. https://doi.org/10.1037/0033-2909.84.5.888.

[3] American Educational Research Association, American Psychological Association, & National Council on Measurement in Education. (2014). Standards for educational and psychological testing. American Educational Research Association.

[4] Bakker, A. B., & Demerouti, E. (2007). The Job Demands-Resources model: State of the art. *Journal of Managerial Psychology, 22*(3), 309–328. https://doi.org/10.1108/02683940710733115.

[5] Bakker, A. B., & Demerouti, E. (2017). Job demands–resources theory: Taking stock and looking forward. *Journal of Occupational Health Psychology, 22*(3), 273–285. https://doi.org/10.1037/ocp0000056.

[6] Bakker, A. B., Demerouti, E., & Sanz-Vergel, A. (2023). Job demands–resources theory: Ten years later. *Annual Review of Organizational Psychology and Organizational Behavior, 10*, 25–53. https://doi.org/10.1146/annurev-orgpsych-120920-053933.

[7] Bakker, A. B., Hakanen, J. J., Demerouti, E., & Xanthopoulou, D. (2007). Job resources boost work engagement, particularly when job demands are high. *Journal of Educational Psychology, 99*(2), 274–284. https://doi.org/10.1037/0022-0663.99.2.274.

[8] Beaton, D. E., Bombardier, C., Guillemin, F., & Ferraz, M. B. (2000). Guidelines for the process of cross-cultural adaptation of self-report measures. *Spine*, *25*(24), 3186–3191. https://doi.org/10.1097/00007632-200012150-00014.

[9] Boateng, G. O., Neilands, T. B., Frongillo, E. A., Melgar-Quiñonez, H. R., & Young, S. L. (2018). Best practices for developing and validating scales for health, social, and behavioral research: A primer. *Frontiers in Public Health*, *6*, Article 149. https://doi.org/10.3389/fpubh.2018.00149.

[10] Brayfield, A. H., & Rothe, H. F. (1951). An Index of Job Satisfaction. Journal of Applied Psychology, 35, 307–311.

[11] Brislin, R. W. (1970). Back-translation for cross-cultural research. *Journal of Cross-Cultural Psychology*, *1*(3), 185–216. https://doi.org/10.1177/135910457000100301.

[12] Chen, F. F. (2007). Sensitivity of goodness of fit indexes to lack of measurement invariance. *Structural Equation Modeling, 14*(3), 464–504. https://doi.org/10.1080/10705510701301834.

[13] Cheung, G. W., & Rensvold, R. B. (2002). Evaluating goodness-of-fit indexes for testing measurement invariance. *Structural Equation Modeling*, *9*(2), 233–255. https://doi.org/10.1207/S15328007SEM0902_5.

[14] Cheung, G. W., Cooper-Thomas, H. D., Lau, R. S., & Wang, L. C. (2024). Reporting reliability, convergent and discriminant validity with structural equation modeling: A review and best-practice recommendations. A*sia Pacific Journal of Management*, *41*(2), 745–783. https://doi.org/10.1007/s10490-023-09871-y.

[15] Clark, A. E. (1997). Job satisfaction and gender: Why are women so happy at work? *Labour Economics*, *4*(4), 341–372. https://doi.org/10.1016/S0927-5371(97)00010-9.

[16] Cohen, J. (1988). Statistical power analysis for the behavioral sciences (2e éd.). Lawrence Erlbaum.

[17] Crawford, E. R., LePine, J. A., & Rich, B. L. (2010). Linking job demands and resources to employee engagement and burnout: A theoretical extension and meta-analytic test. *Journal of Applied Psychology, 95*(5), 834–848. https://doi.org/10.1037/a0019364.

[18] Cronbach, L. J., & Meehl, P. E. (1955). Construct validity in psychological tests. *Psychological Bulletin*, *52*(4), 281–302. https://doi.org/10.1037/h0040957.

[19] Diener, E. (1984). Subjective well-being. *Psychological Bulletin*, *95*(3), 542–575. https://doi.org/10.1037/0033-2909.95.3.542.

[20] Djeumeni Tchamabe, M., Yembi, J., Bessala, A., Maho, J., & Kenne, V. (2025). Note d'orientation: Entrée et maintien dans le métier des enseignantes et enseignants – Cameroun (AAP4, Yaoundé I). Programme APPRENDRE, Agence Universitaire de la Francophonie. https://apprendre.auf.org/wp-content/uploads/2025/08/Note-dorientation-AAP4-Cameroun-Yaounde-I.pdf.

[21] Dunn, T. J., Baguley, T., & Brunsden, V. (2014). From alpha to omega: A practical solution to the pervasive problem of internal consistency estimation. *British Journal of Psychology, 105*(3), 399–412. https://doi.org/10.1111/bjop.12046.

[22] Eryilmaz, N., Kennedy, A. I., Strietholt, R., & Johansson, S. (2025). Teacher job satisfaction: International evidence on the role of school working conditions and teacher characteristics. *Studies in Educational Evaluation*, *86*, Article 101474. https://doi.org/10.1016/j.stueduc.2025.101474.

[23] Faragher, E. B., Cass, M., & Cooper, C. L. (2005). The relationship between job satisfaction and health: A meta-analysis. *Occupational and Environmental Medicine*, *62*(2), 105–112. https://doi.org/10.1136/oem.2002.006734.

[24] Fornell, C., & Larcker, D. F. (1981). Evaluating structural equation models with unobservable variables and measurement error. *Journal of Marketing Research*, *18*(1), 39–50. https://doi.org/10.1177/002224378101800104.

[25] Gazali, N., Perdima, F. E., Setiawan, E., Lobo, J., & Sari, M. (2025). Psychometric evaluation of the Indonesian physical education teacher job satisfaction scale (IPET-JSS): Development and validation of a contextual job satisfaction instrument for physical education. *Edu Sportivo: Indonesian Journal of Physical Education*, *6*(2), 210–224. https://doi.org/10.25299/es:ijope.2025.vol6(2).23589.

[26] Gelfand, M. J., Aycan, Z., Erez, M., & Leung, K. (2017). Cross-cultural industrial organizational psychology and organizational behavior: A hundred-year journey. *Journal of Applied Psychology*, *102*(3), 514–529. https://doi.org/10.1037/apl0000186.

[27] Gignac, G. E., & Szodorai, E. T. (2016). Effect size guidelines for individual differences researchers. *Personality and Individual Differences*, *102*, 74–78. https://doi.org/10.1016/j.paid.2016.06.069.

[28] Goretzko, D., Pham, T. T. H., & Bühner, M. (2021). Exploratory factor analysis: Current use, methodological developments and recommendations for good practice. *Current Psychology*, *40*(7), 3510–3521. https://doi.org/10.1007/s12144-019-00300-2.

[29] Hackman, J. R. & Oldham, G. R. (1974). *The job diagnostic survey: An instrument for the diagnosis of jobs and the evaluation of job redesign projects.* Department of Administrative Sciences: Yale University.

[30] Hambleton, R. K. (2005). Issues, designs, and technical guidelines for adapting tests into multiple languages and cultures. *In* R. K. Hambleton, P. F. Merenda, & C. D. Spielberger (Eds.), *Adapting educational and psychological tests for cross-cultural assessment* (pp. 3–38). Lawrence Erlbaum Associates.

[31] Hayes, A. F. (2022). *Introduction to mediation, moderation, and conditional process analysis: A regression-based approach (3e éd.).* Guilford Press.

[32] Henrich, J., Heine, S. J., & Norenzayan, A. (2010). The weirdest people in the world? *Behavioral and Brain Sciences*, *33*(2–3), 61–83. https://doi.org/10.1017/S0140525X0999152X.

[33] Hobfoll, S. E. (1989). Conservation of resources: A new attempt at conceptualizing stress. *American Psychologist, 44*(3), 513–524. https://doi.org/10.1037/0003-066X.44.3.513.

[34] Hobfoll, S. E. (2001). The influence of culture, community, and the nested-self in the stress process: Advancing conservation of resources theory. *Applied Psychology*, *50*(3), 337–421. https://doi.org/10.1111/1464-0597.00062.

[35] Hobfoll, S. E. (2011). Conservation of resource caravans and engaged settings. *Journal of Occupational and Organizational Psychology*, *84*(1), 116–122. https://doi.org/10.1111/j.2044-8325.2010.02016.x.

[36] Hu, L., & Bentler, P. M. (1999). Cutoff criteria for fit indexes in covariance structure analysis: Conventional criteria versus new alternatives. *Structural Equation Modeling, 6*(1), 1–55. https://doi.org/10.1080/10705519909540118.

[37] International Test Commission. (2017). *The ITC guidelines for translating and adapting tests (2e éd.).* https://www.intestcom.org/files/guideline_test_adaptation_2ed.pdf.

[38] Johnson, T., Kulesa, P., Cho, Y. I., & Shavitt, S. (2005). The relation between culture and response styles: Evidence from 19 countries. *Journal of Cross-Cultural Psychology, 36(*2), 264–277. https://doi.org/10.1177/0022022104272905.

[39] Judge, T. A., Weiss, H. M., Kammeyer-Mueller, J. D., & Hulin, C. L. (2017). Job attitudes, job satisfaction, and job affect: A century of continuity and of change. *Journal of Applied Psychology, 102*(3), 356–374. https://doi.org/10.1037/apl0000181.

[40] Kanungo, R. N. (1982). Measurement of job and work involvement. *Journal of Applied Psychology, 67*(3), 341–349.

[41] Kline, R. B. (2023). *Principles and practice of structural equation modeling (5e éd.).* Guilford Press.

[42] Laajaj, R., Macours, K., Pinzon Hernandez, D. A., Arias, O., Gosling, S. D., Potter, J., Rubio-Codina, M., & Vakis, R. (2019). Challenges to capture the Big Five personality traits in non-WEIRD populations. *Science Advances, 5*(7), Article eaaw5226. https://doi.org/10.1126/sciadv.aaw5226.

[43] Li, C.-H. (2016). Confirmatory factor analysis with ordinal data: Comparing robust maximum likelihood and diagonally weighted least squares. *Behavior Research Methods, 48*(3), 936–949. https://doi.org/10.3758/s13428-015-0619-7.

[44] Li, J., Zeng, Y., Wei, X., Cheng, Z., & Zhang, B. (2026). Chinese version of the labour ward job satisfaction scale for midwives: Translation, cultural adaptation and psychometric validation. *BMC Nursing, 25*, Article 812. https://doi.org/10.1186/s12912-026-05107-8.

[45] Lim, V. K. G., & Teo, T. S. H. (1999). Occupational stress and IT personnel in Singapore: Factorial dimensions and differential effects. *International Journal of Information Management, 19*(4), 277–291. https://doi.org/10.1016/S0268-4012(99)00027-4.

[46] Locke, E. A. (1976). The nature and causes of job satisfaction. Dans M. D. Dunnette (Éd.), *Handbook of industrial and organizational psychology* (pp. 1297–1349). Rand McNally.

[47] Martinez-Tomas, J., & Cuevas-Lopez, C. (2026). Analysis of the scales of Job Satisfaction in the service sector. *WPOM – Working Papers on Operations Management, 17.* https://doi.org/10.4995/wpom.25774.

[48] McNeish, D. (2018). Thanks coefficient alpha, we'll take it from here. *Psychological Methods, 23*(3), 412–433. https://doi.org/10.1037/met0000144.

[49] Meade, A. W., & Bauer, D. J. (2007). Power and precision in confirmatory factor analytic tests of measurement invariance. *Structural Equation Modeling, 14*(4), 611–635. https://doi.org/10.1080/10705510701575396.

[50] Messick, S. (1995). Validity of psychological assessment: Validation of inferences from persons' responses and performances as scientific inquiry into score meaning. *American Psychologist, 50*(9), 741–749. https://doi.org/10.1037/0003-066X.50.9.741.

[51] Michaelowa, K. (2002). Teacher job satisfaction, student achievement, and the cost of primary education in Francophone Sub-Saharan Africa (HWWA Discussion Paper No. 188). Hamburgisches Welt-Wirtschafts-Archiv. https://ageconsearch.umn.edu/record/26273/files/dp020188.pdf.

[52] Muteveri, E., & Egunjobi, J. P. (2025). Validating the instrument, Muteveri's Teacher Job Satisfaction Scale. *International Journal of Research and Innovation in Social Science, 9*(5), 5034–5040. https://doi.org/10.47772/IJRISS.2025.905000390.

[53] Muthukrishna, M., Bell, A. V., Henrich, J., Curtin, C. M., Gedranovich, A., McInerney, J., & Thue, B. (2020). Beyond Western, Educated, Industrial, Rich, and Democratic (WEIRD) psychology: Measuring and mapping scales of cultural and psychological distance. *Psychological Science, 31*(6), 678–701. https://doi.org/10.1177/0956797620916782.

[54] Oldham, G. R. (1975). Development of the Job Diagnostic Survey. *Journal of Applied Psychology, 60*(2), 159–170. https://doi.org/10.1037/h0076546.

[55] Pepe, A., Addimando, L., & Veronese, G. (2017). Measuring teacher job satisfaction: Assessing invariance in the Teacher Job Satisfaction Scale (TJSS) across six countries. Europe's *Journal of Psychology, 13*(3), 396–416. https://doi.org/10.5964/ejop.v13i3.1389.

[56] Podsakoff, N. P., LePine, J. A., & LePine, M. A. (2007). Differential challenge stressor-hindrance stressor relationships with job attitudes, turnover intentions, turnover, and withdrawal behavior: A meta-analysis. *Journal of Applied Psychology, 92*(2), 438–454. https://doi.org/10.1037/0021-9010.92.2.438.

[57] Podsakoff, P. M., MacKenzie, S. B., & Podsakoff, N. P. (2012). Sources of method bias in social science research and recommendations on how to control it. *Annual Review of Psychology, 63*, 539–569. https://doi.org/10.1146/annurev-psych-120710-100452.

[58] Putnick, D. L., & Bornstein, M. H. (2016). Measurement invariance conventions and reporting: The state of the art and future directions for psychological research. *Developmental Review, 41*, 71–90. https://doi.org/10.1016/j.dr.2016.06.004.

[59] Rad, M. S., Martingano, A. J., & Ginges, J. (2018). Toward a psychology of Homo sapiens: Making psychological science more representative of the human population. *Proceedings of the National Academy of Sciences, 115*(45), 11401–11405. https://doi.org/10.1073/pnas.1721165115.

[60] Rodriguez, A., Reise, S. P., & Haviland, M. G. (2016). Evaluating bifactor models: Calculating and interpreting statistical indices. *Psychological Methods, 21*(2), 137–150. https://doi.org/10.1037/met0000045.

[61] Smith, P. B. (2004). Acquiescent response bias as an aspect of cultural communication style. *Journal of Cross-Cultural Psychology, 35*(1), 50–61. https://doi.org/10.1177/0022022103260380.

[62] Smith, P. C., Kendall, L. M., & Hulin, C. L. (1969). The measurement of satisfaction in work and retirement: A strategy for the study of attitudes. Rand McNally.

[63] Spector, P. E. (1985). Measurement of human service staff satisfaction: Development of the Job Satisfaction Survey.

American Journal of Community Psychology, 13(6), 693–713. https://doi.org/10.1007/BF00929796.

[64] Thompson, E. R., & Phua, F. T. T. (2012). A Brief Index of Affective Job Satisfaction. *Group & Organization Management, 37*(3), 275–307.

[65] UNICEF Cameroun. (2026, 20 avril). À l'Est du Cameroun, des classes surchargées apprennent à se gouverner elles-mêmes [Récit]. https://www.unicef.org/cameroon/fr/recits/%C3%A0-lest-du-cameroun-des-classes-surcharg%C3%A9es-apprennent-%C3%A0-se-gouverner-elles-m%C3%AAmes.

[66] Vallerand, R. J. (1989). Vers une méthodologie de validation trans-culturelle de questionnaires psychologiques: Implications pour la recherche en langue française. *Canadian Psychology/ Psychologie canadienne, 30*(4), 662–680. https://doi.org/10.1037/h0079856.

[67] van de Vijver, F., & Tanzer, N. K. (2004). Bias and equivalence in cross-cultural assessment: An overview. *Revue européenne de psychologie appliquée, 54*(2), 119–135. https://doi.org/10.1016/j.erap.2003.12.004.

[68] Vandenberg, R. J., & Lance, C. E. (2000). A review and synthesis of the measurement invariance literature: Suggestions, practices, and recommendations for organizational research. *Organizational Research Methods, 3*(1), 4–70. https://doi.org/10.1177/109442810031002.

[69] Watkins, M. W. (2018). Exploratory factor analysis: A guide to best practice. *Journal of Black Psychology, 44*(3), 219–246. https://doi.org/10.1177/0095798418771807.

[70] Weiss, D. J., Dawis, R. V., England, G. W., & Lofquist, L. H. (1967). Manual for the Minnesota Satisfaction Questionnaire. University of Minnesota, Industrial Relations Center.

[71] Yalin-Ucar, M., & Bagatarhan, T. (2022). The Teacher Job Satisfaction Scale – Turkish form: Psychometric properties and construct validity. I*nternational Online Journal of Educational Sciences, 14*(4), 945–956. https://doi.org/10.15345/iojes.2022.04.010.

[72] Zhao, X., Lynch, J. G., Jr., & Chen, Q. (2010). Reconsidering Baron and Kenny: Myths and truths about mediation analysis. *Journal of Consumer Research, 37*(2), 197–206. https://doi.org/10.1086/651257.

Copyright © 2026 The Author(s). Published by Scientific & Academic Publishing
This work is licensed under the Creative Commons Attribution International License (CC BY). http://creativecommons.org/licenses/by/4.0/